Tree Survey

At

Land to the east of the A40
Ross-on-Wye

Inspected by:-
Julian Wilkes BSc.For, MSc.Land Man, MIC.For, TechArborA
Treescene Ltd
The Walled Garden
Old Coedarhydyglyn
St Nicholas
Cardiff
CF5 6SG
Tel No. 029 20599300

12th July, 2021

Registered Office: Treescene Limited
The Walled Garden, Old Coedarhydyglyn, St. Nicholas, Cardiff CF5 6SG
Tel. 029 205 99300 Email. trees@treescene.co.uk

I have been instructed by Edenstone Homes to carry out a survey on trees at Land to the east of the A40, Ross-on-Wye.

Scope of Report

This Tree Survey has been undertaken within the recommendations of British Standards 5837:2012 and current good arboricultural practice.

The survey entailed a visual inspection from ground level of all trees.

Each tree has been numbered and, where instructed, have been tagged using small durable metal or plastic tags.

Due to variations of existing ground levels through the site, height dimensions are estimated and are given in metres.

Trunk/stem diameters are measured at 1.5 metres above ground level, or immediately above the root flare for multi-stemmed trees.

Estimated branch spread is taken in metres from the centre of the trunk, at the four cardinal points of a compass, to achieve an accurate representation of crown shape.

An assessment of a tree's age classification is made in terms of its maturity within the site's landscape.

An assessment of a tree's physiological condition is made as good, fair, poor, dead.

Data on the structural condition of the tree has been entered, e.g., collapsing, leaning and the presence of any decay or physical defect has been noted.

Preliminary management recommendations include further investigation of suspected defects that require more detailed assessment or potential for wildlife habitat.

An assessment of a tree's future life expectancy is made as <10, 10-20, 20-40 or >40 etc.

Table 1 – Cascade chart for tree quality assessment

Category and definition	Criteria (including subcategories where appropriate)		
Category U Those in such a condition that they cannot realistically be retained as living trees in the context of the current land use for longer than 10 years	• Trees that have a serious, irremediable, structural defect, such that their early loss is expected due to collapse, including those that will become unviable after removal of other U category trees (i.e. where, for whatever reason, the loss of companion shelter cannot be mitigated by pruning) • Trees that are dead or are showing signs of significant, immediate, and irreversible overall decline • Trees infected with pathogens of significance to the health and/or safety of other trees nearby, or very low quality trees suppressing adjacent trees of better quality NOTE Category U trees can have existing or potential conservation value which it might be desirable to preserve; see 4.5.7		
	1 Mainly Arboricultural values	2 Mainly landscape values	3 Mainly cultural values, including conservation
Category A Those of high quality with an estimated remaining life expectancy of at least 40 years	Trees that are particularly good examples of their species, especially if rare or unusual, or essential components of groups, or of formal or semi-formal arboricultural features (e.g. the dominant and/or principal trees within an avenue)	Trees, groups or woodlands of particular visual importance as Arboricultural and/or landscape features	Trees, groups or woodlands of significant conservation; historical, commemorative or other value (e.g. veteran trees or wood-pasture)
Category B Those of moderate quality with an estimated remaining life expectancy of at least 20 years	Trees that might be included in category A, but are downgraded because of impaired condition (e.g. presence of significant though remediable defects, including unsympathetic past management and storm damage), such that they are unlikely to be suitable for retention for beyond 40 years; or trees lacking the special quality necessary to merit the category A designation	Trees present in numbers, usually growing as groups or woodlands, such that they attract a higher collective rating than they might as individuals; or trees occurring as collectives but situated so as to make little visual contribution to the wider locality	Trees with material conservation or other cultural benefits
Category C Those of low quality with an estimated remaining life expectancy of at least 10 years, or young trees with a stem diameter below 150mm	Unremarkable trees of very limited merit or such impaired condition that they do not qualify in higher categories	Trees present in groups or woodlands, but without this conferring on them significantly greater collective landscape value, and/or trees offering low or only temporary/transient landscape benefits	Trees with no material conservation or other cultural value

Tree No.	Species	Height(m)	Single/Multi Stemmed	Stem Diameter(m)	Branch Spread(m)				Height of Crown(m)	Age	Physiological Condition	Structural Condition	Prel. Man. Recommendations	Est. Remaining Contribution	Category
					N	E	S	W							
G1	Group of Crack Willow (Salix fragilis) and Alder (Alnus glutinosa)	Up to 22	Single and multi	0.5 (avg)	10	6	8	6	1	Mature	Fair	Streamside trees of generally reasonable form. Selected specimens of large diameter Crack Willow exhibit signs of basal decay and extensive storm damage. Further structural failure of Crack Willows is likely without remedial tree surgery.	Undertake 7-8m overall reductions of Crack Willows to prevent further structural damage	20-40	B
T2	DEAD														U
G3	Group of Alder (Alnus glutinosa)	18	Single and multi	0.5 (avg)	6	5	5	5	2	Mature	Fair	Streamside trees of reasonable form	No action required at this time	20-40	B

Tree No.	Species	Height(m)	Single/Multi Stemmed	Stem Diameter(m)	Branch Spread(m)				Height of Crown(m)	Age	Physiological Condition	Structural Condition	Prel. Man. Recommendations	Est. Remaining Contribution	Category
					N	E	S	W							
G4	Group of Crack Willow (Salix fragilis), Hawthorn (Crataegus monogyna), Goat Willow (Salix caprea), Alder (Alnus glutinosa) and Elder (Sambucus nigra)	Up to 13	Single and multi	0.3 (avg)	2	2	2	2	1	Middle aged	Fair	Scrubby specimens effectively forming gappy hedgerow alongside of watercourse	No action required at this time	20-40	C
G5	Group of Alder (Alnus glutinosa) and Hawthorn (Crataegus monogyna)	Up to 18	Single and multi	0.45 (avg)	5	3	4	4	1	Mature	Fair	Streamside trees of reasonable form	No action required at this time	20-40	B
G6	Group of Crack Willow (Salix fragilis)	Up to 19	Multi	1	9	8	9	7	1	Mature	Fair to poor	Multi stemmed specimens that have partially collapsed	Undertake pollarding at 3.5m above ground level	20-40	C

Tree No.	Species	Height(m)	Single/Multi Stemmed	Stem Diameter(m)	Branch Spread(m)				Height of Crown(m)	Age	Physiological Condition	Structural Condition	Prel. Man. Recommendations	Est. Remaining Contribution	Category
					N	E	S	W							
G7	Group of Crack Willow (Salix fragilis)	Up to 19	Multi	1 (avg)	9	9	7	6	1	Mature	Fair to poor	Multi stemmed streamside trees with evidence of basal decay	Pollard specimens at 3 - 3.5m above ground level	20-40	C
G8	Group of Crack Willow (Salix fragilis)	Up to 19	Multi	1 (avg)	10	9	9	8	0	Mature	Fair to poor	Multi stemmed streamside specimens of variable form with evidence of basal decay. Some specimens are partially collapsed.	Pollard all specimens at 3 - 3.5m above ground level	20-40	C
G9	Group of Crack Willow (Salix fragilis)	10	Multi	0.4 (avg)	4	4	4	4	0	Middle aged	Fair to poor	Multi stemmed streamside specimens that may have been coppiced in the past. Some stems are partially collapsed.	Coppice all specimens to prevent further structural failure	10-20	C
T10	Oak (Quercus robur)	14	Single	0.61	7	6	7	7	3	Mature	Good	Streamside tree of good form. Main stem heavily colonised by ivy thus preventing full inspection.	No action required at this time	>40	A
T11	Alder (Alnus glutinosa)	14	Multi	0.65	5	5	4	3	1	Mature	Fair	Multi stemmed streamside specimen of reasonable form	No action required at this time	20-40	B
T12	Crack Willow (Salix fragilis)	12	Multi	0.65	7	8	6	6	1	Middle aged	Fair to poor	Multi stemmed specimen with potentially weak basal forks	Pollard at 2m to prevent structural failure	20-40	C

Tree No.	Species	Height(m)	Single/Multi Stemmed	Stem Diameter(m)	Branch Spread(m)				Height of Crown(m)	Age	Physiological Condition	Structural Condition	Prel. Man. Recommendations	Est. Remaining Contribution	Category
					N	E	S	W							
T13	Crack Willow (Salix fragilis)	4	Single	0.35	1	1	2	4	0	Middle aged	Fair to poor	Coppice re-growth from fallen limb	Re-coppice	10-20	C
T14	Crack Willow (Salix fragilis)	9	Multi	0.7	8	8	6	2	0	Mature	Fair to poor	Multi stemmed specimen that has partially collapsed	Coppice	10-20	C
G15	Group of Alder (Alnus glutinosa)	18	Single and multi	0.65 (avg)	7	5	6	5	1	Middle aged	Fair	Streamside trees of generally reasonable form. One or two specimens exhibit signs of slight die-back of foliage.	Monitor for health	20-40	B
G16	Group of Hazel (Corylus avellana), Elm (Ulmus spp), Blackthorn (Prunus spinosa) and Hawthorn (Crataegus monogyna)	4	Multi	0.1	1	1	1	1	0	Young	Fair to poor	Scrubby specimens forming gappy hedgerow. Elms are suffering from Dutch Elm disease.	Remove dead and dying Elm	20-40	C

Tree No.	Species	Height(m)	Single/Multi Stemmed	Stem Diameter(m)	Branch Spread(m)				Height of Crown(m)	Age	Physiological Condition	Structural Condition	Prel. Man. Recommendations	Est. Remaining Contribution	Category
					N	E	S	W							
G17	Group of Snowberry (Sympho-ricarpos albus) and Elder (Sambucus nigra)	1.5	Multi	0.1	0.5	0.5	0.5	0.5	0	Middle aged	Fair to poor	Scrubby specimens forming sparse hedgerow	No action required at this time	10-20	C
G18	Group of Hawthorn (Crataegus monogyna) and Blackthorn (Prunus spinosa)	3	Multi	0.1	1	1	1	1	0	Young	Fair to poor	Scrubby specimens forming gappy hedgerow. Some thinning and die-back of foliage within crowns.	Monitor for health	20-40	C

Tree No.	Species	Height(m)	Single/Multi Stemmed	Stem Diameter(m)	Branch Spread(m)				Height of Crown(m)	Age	Physiological Condition	Structural Condition	Prel. Man. Recommendations	Est. Remaining Contribution	Category
					N	E	S	W							
G19	Group of Blackthorn (Prunus spinosa), Hawthorn (Crataegus monogyna), Hazel (Corylus avellana), Oak (Quercus robur), Elder (Sambucus nigra) and Dogwood (Cornus sanquinea)	3	Multi	0.1	1	1	1	1	0	Young	Fair	Scrubby specimens forming dense hedgerow	No action required at this time	20-40	C
G20	Group of Oak (Quercus robur), Hawthorn (Crataegus monogyna) Elm (Ulmus spp)	Up to 6	Single and multi	0.1 (avg)	1	1	1	1	0	Young	Fair to poor	Scrubby specimens forming gappy hedgerow that is dominated by dead and dying Elms on the northern end of this group	Remove dead and dying Elm	20-40	C

Tree No.	Species	Height(m)	Single/Multi Stemmed	Stem Diameter(m)	Branch Spread(m)				Height of Crown(m)	Age	Physiological Condition	Structural Condition	Prel. Man. Recommendations	Est. Remaining Contribution	Category
					N	E	S	W							
G21	Group of Elm (Ulmus spp), Holly (Ilex aquifolium), Blackthorn (Prunus spinosa) and Hawthorn (Crataegus monogyna)	5	Single and multi	0.15	1	1	1	1	0	Young	Fair	Scrubby specimens forming gappy hedgerow dominated by Elm that appears mainly healthy apart from some isolated dying specimens at northern end of this group.	Remove dead and dying Elm.	20-40	C
T22	Oak (Quercus robur)	4	Single	0.2	3	2	3	2	0	Young	Good	Tree developing from hedge	No work required	10-20	C
T23	Oak (Quercus robur)	4	Single	0.3	5	5	5	5	0	Young	Good	Tree developing from hedge	No work required	10-20	C

Recommendations for Tree Protection during Development

Due to the high risk to established trees we would recommend the installation of protective fencing prior to commencement of **any** works on site in accordance with BS 5837:2012 "Trees in relation to Construction". Trees should be protected using scaffold frame supporting weld mesh panel fencing sited on the edge of the Root Protection Area as defined in BS5837:2012. These fenced areas should not be used for the storage of any plant machinery or materials and personnel should be excluded at all times; these fences should remain in situ until after final landscaping has been carried out, removed by hand with great care to prevent compaction or root damage to established trees. The services of a suitably qualified arborist should be sought **prior** to the commencement of each stage.

Figure 2 Default specification for protective barrier

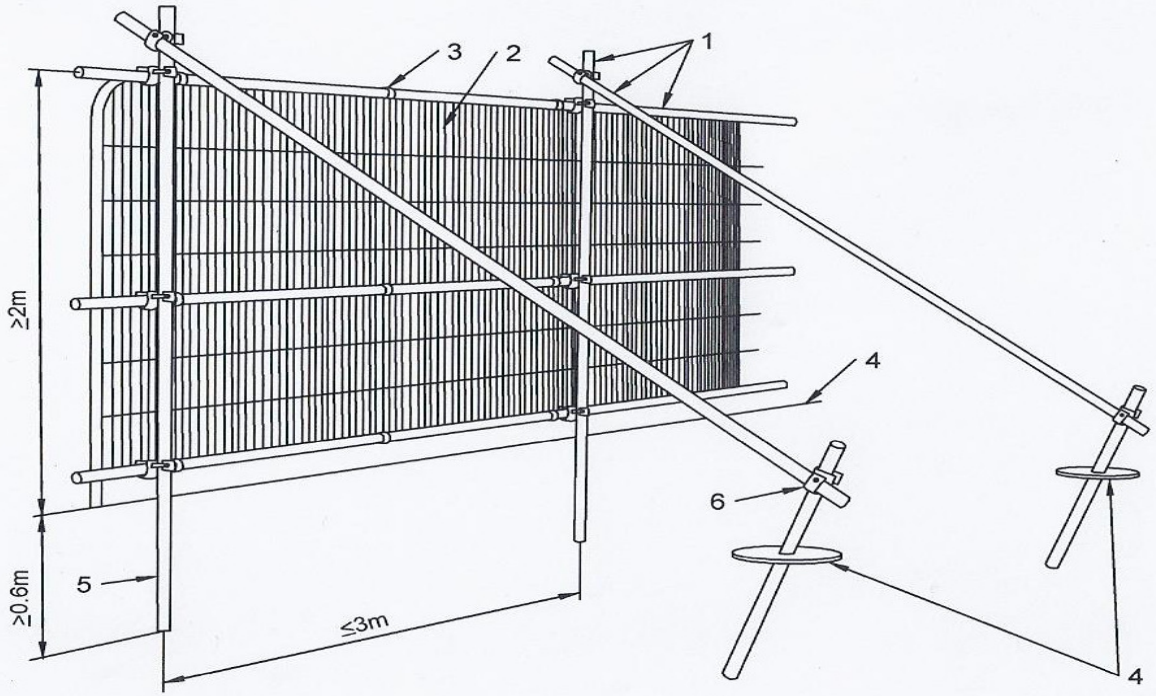

Key

1 Standard scaffold poles
2 Heavy gauge 2m tall galvanized tube and welded mesh infill panels
3 Panels secured to uprights and cross-members with wire ties
4 Ground level
5 Uprights driven into the ground until secure (minimum depth 0.6m)
6 Standard scaffold clamps