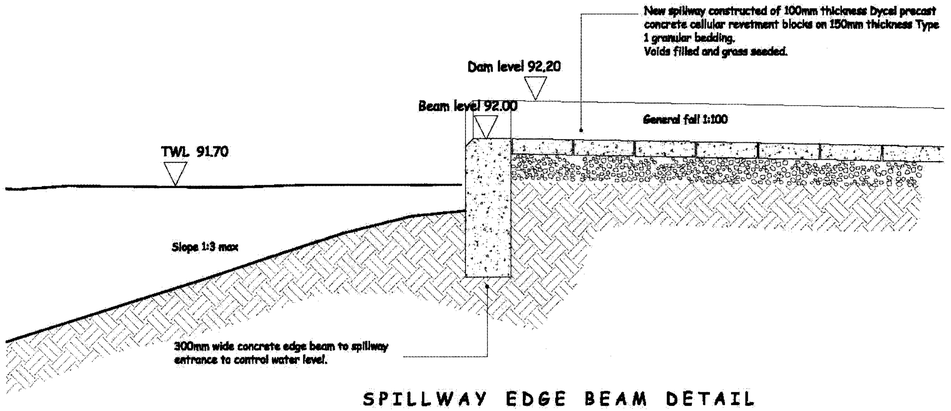

SPILLWAY EDGE BEAM DETAIL

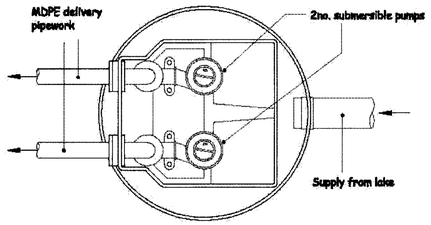

PLAN
PUMP CHAMBER

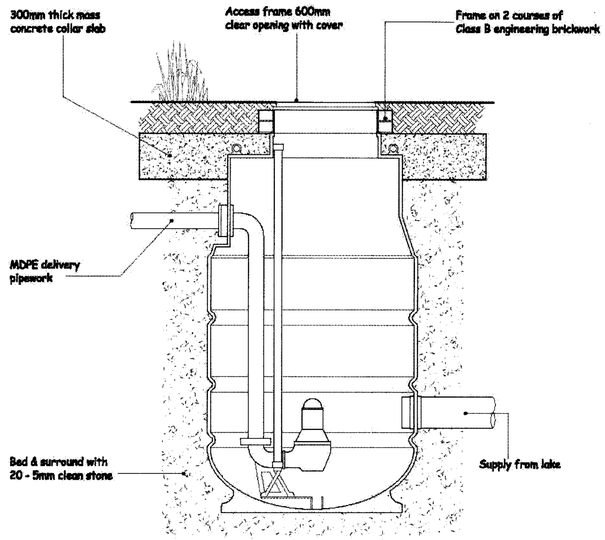

SECTION
PUMP CHAMBER

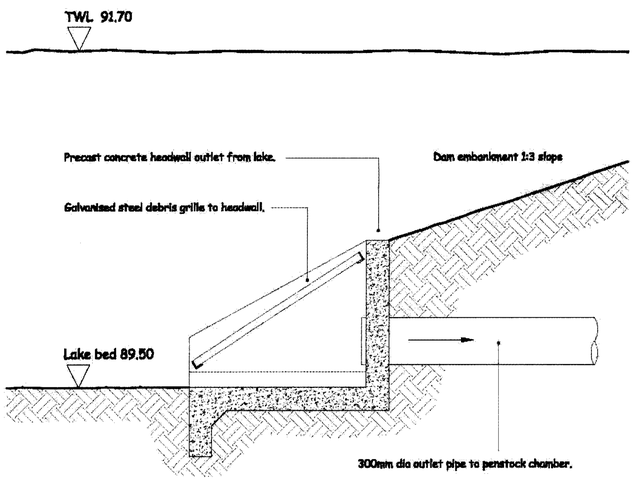

SECTION
HEADWALL DETAIL

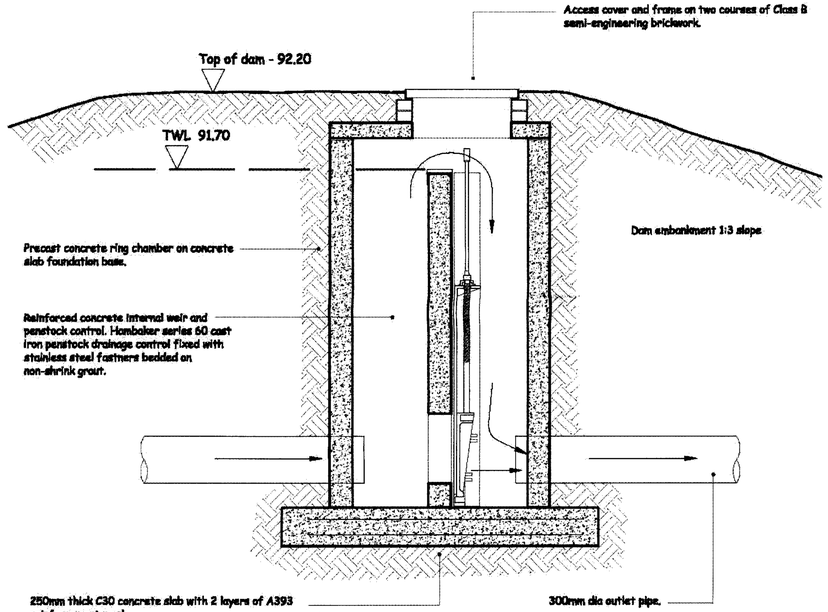

SECTION
PENSTOCK OUTLET DETAIL

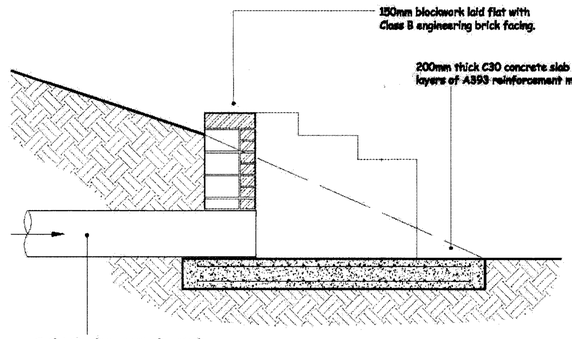

SECTION
HEADWALL DETAIL

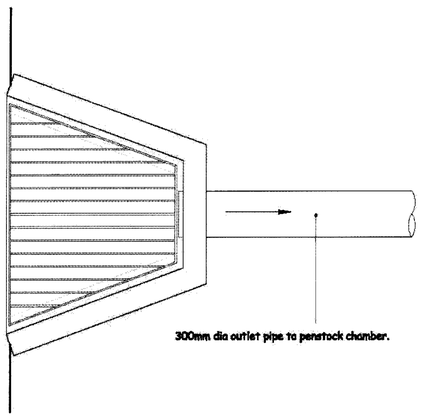

PLAN
HEADWALL DETAIL

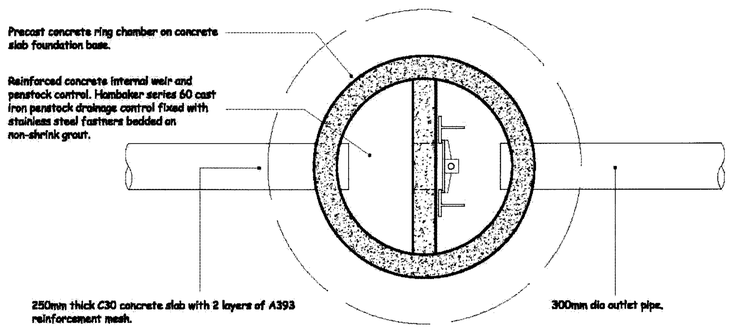

PLAN
PENSTOCK OUTLET DETAIL

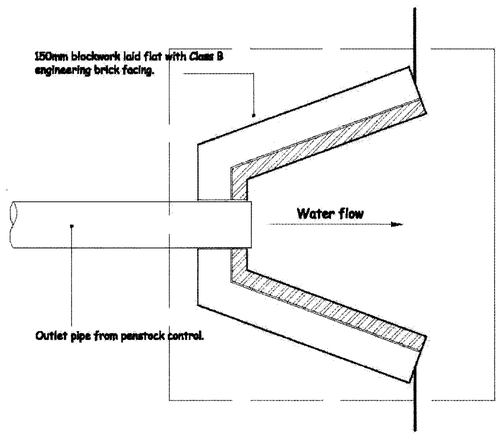

PLAN
HEADWALL DETAIL

Rev	Notes
A	12 July 2010 - minor adjustments etc
B	20 July 2010 - adjusted penstock detail, added headwall etc

/101964/F

KINGCOMBE AQUACARE LTD

The Cropmead Estate,
Crewkerne, Somerset, TA18 7HQ
Tel: +44(0)1460-279200 Fax: +01460-279218

E-Mail: jc@kingcombe.com
Web-site: http://www.kingcombe.com

Specialists in Water Management
For Landscapes, Fisheries,
Leisure and Conservation

Client
?

Job Title
Lower Venn Farm,
Avenbury,
Worcester

Drawing Title
Proposed Details

Drawing Number KA 103

Drawn by: JL | Rev: B

Scale: As Shown @ A1 | Date: July 2010