S / 110775 / F

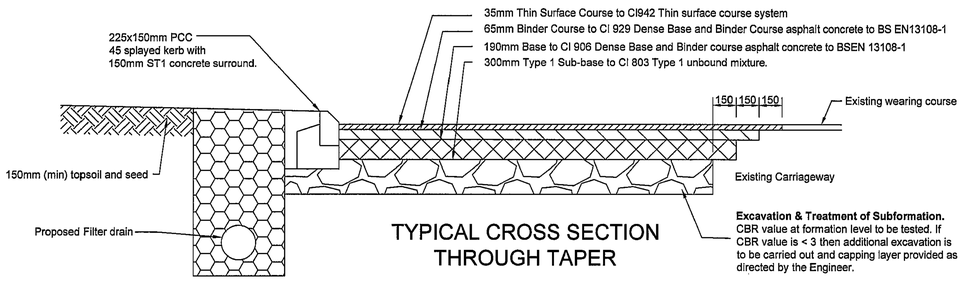

TYPICAL CROSS SECTION THROUGH TAPER

Narrow widening
Where the carrigeway construction is less than 1m in width, narrow widening construction to be incorporated as follows :-
35mm Surface course to Cl 942
65mm Binder course to Cl 929
190mm Base to Cl 906
300mm ST4 concrete

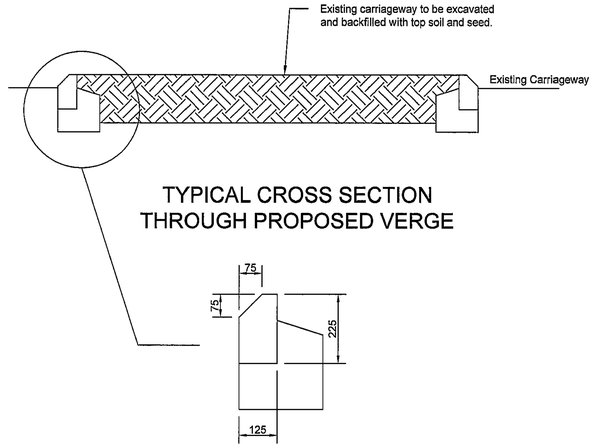

TYPICAL CROSS SECTION THROUGH PROPOSED VERGE

KERB DETAIL

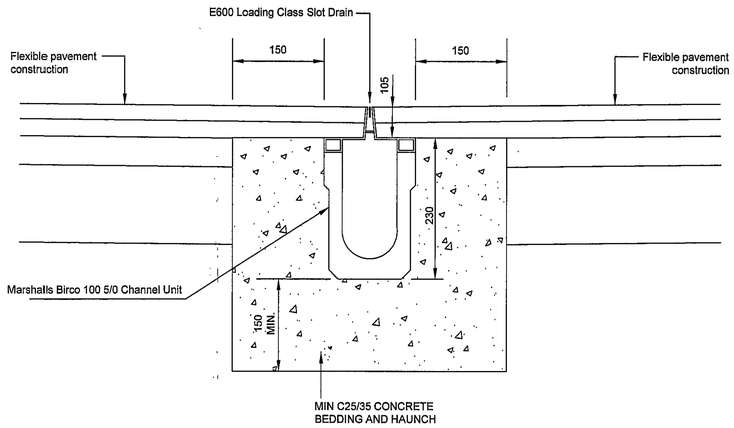

TYPICAL "MARSHALL" SLOT DRAIN DETAIL

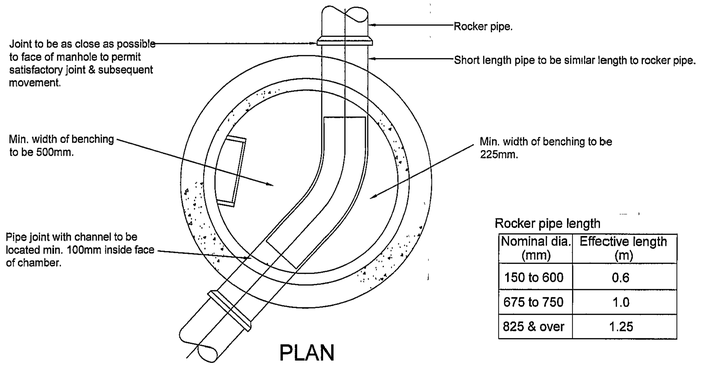

PLAN

Rocker pipe length

Nominal dia. (mm)	Effective length (m)
150 to 600	0.6
675 to 750	1.0
825 & over	1.25

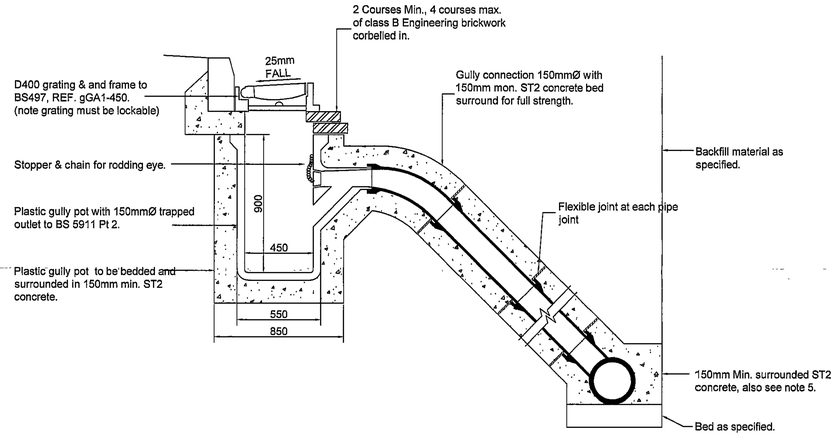

GULLY DETAIL

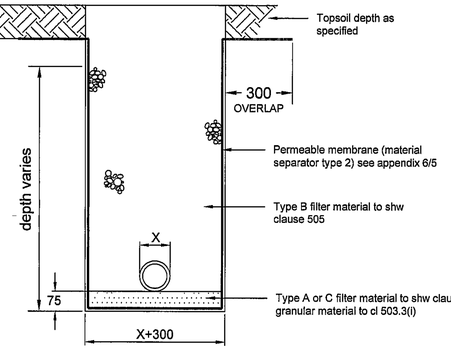

FILTER DRAIN

HEREFORDSHIRE PLANNING DEVELOPMENT
21 JUN 20
To
Action
File

Works to be undertaken in accordance with DMRB SHW

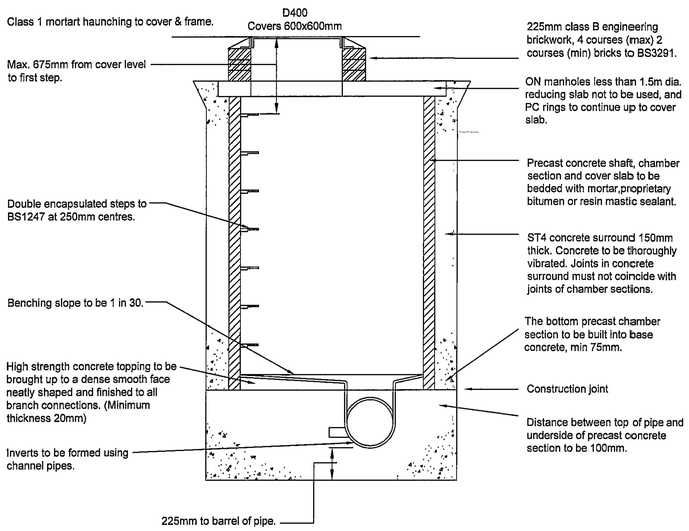

SECTION

TYPICAL MANHOLE DETAIL
TYPE B

MAXIMUM DEPTH FROM COVER LEVEL TO SOFFIT OF PIPE 3m

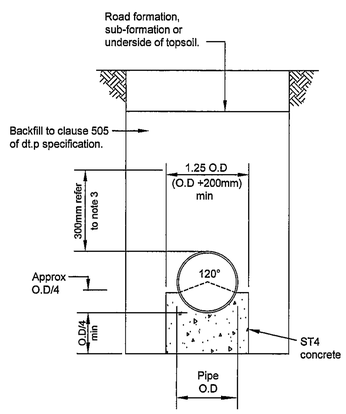

CLASS A BEDDING
PLAIN CONCRETE CRADLE
(BEDDING FACTOR = 2.6)

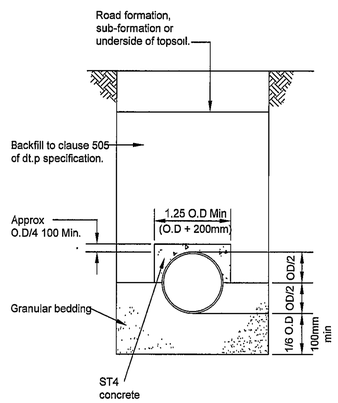

CLASS A BEDDING
PLAIN CONCRETE ARCH
(BEDDING FACTOR = 2.6)

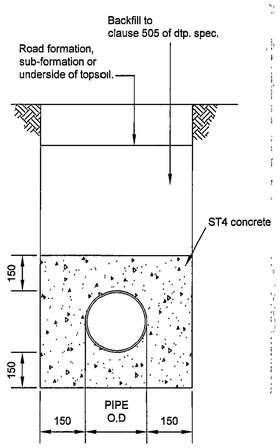

CLASS Z BEDDING
PLAIN CONCRETE BED & SURROUND
(BEDDING FACTOR = 4.5)

NOTES:

01. Refer to specification for further details

02. Bedding beneath and at sides of pipe to be well compacted.

03. Where a concrete cradle is provided, The first 300mm of fill above the crown of the pipe is to be lightly compacted by hand. Mechanical compaction may be used only above this level.

04. Concrete stables & arches may be extended to the sides of trench.

05. Geotextiles may be used where directed or approved by the engineer to contain bedding material in certain soil eg. SAND

06. In very wet conditions, where directed or approved by the engineer a temporary land drain may be laid within the granular bed.

07. Where pipes with flexible joints are used, the concrete protection is to be interrupted over it's full cross section at intervals not exceeding 5 metres (or as directed by the engineer) by a shaped former of bitumen impregnated compressible filler. These interruptions shall coincide with pipe joints.

08. Concrete to have DS-1/AC-1 resistance to sulphates. where depths are greater than 4m below ground level, concrete to have class DS-3/AC-2 sulphate resistance.

09. Where flexible pipes are used. Care must be taken to prevent the pipe from floating.

Euro Garages

A449(T) Ross-on-Wye
Redevelopment of Service Area

UKP SCANNED

Typical Details

Scale: As Shown @ A1

Drawn	Checked	Approved
PJB		

www.psadesign.co.uk
mail@psadesign.co.uk
PSA DESIGN
engineering your environment
CIVIL, STRUCTURAL, GEOTECHNICAL, TRANSPORT
PSA Design
The Old Bank House
6 Berry Lane, Longridge
Preston, PR3 3JA
Tel. 01772 786066
Fax. 01772 786265

Drawing Number: T1192/H/06
Date: June 2010
Rev. A B