SW07/0770/F1

STABLE

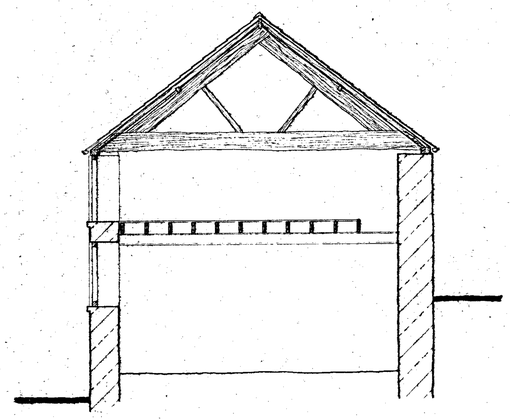

Section V-V

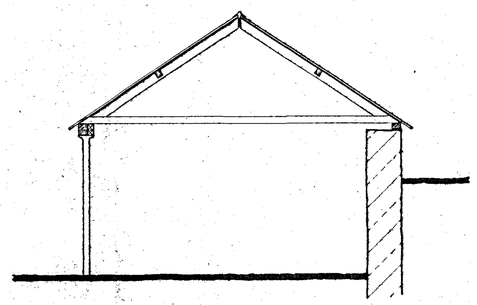

Section U-U

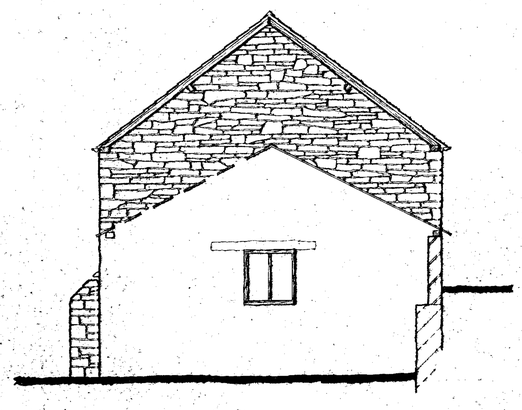

Southeast Elevation

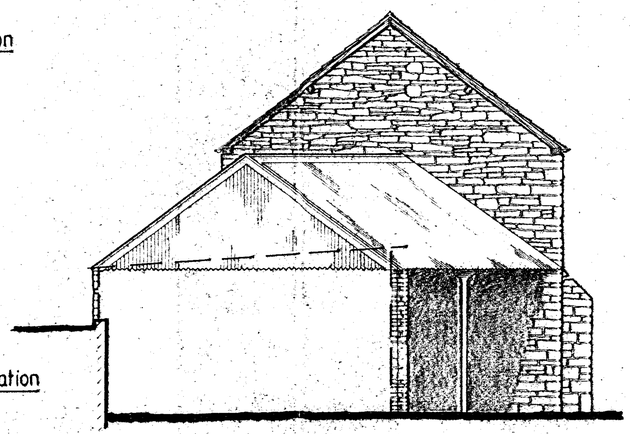

Northwest Elevation

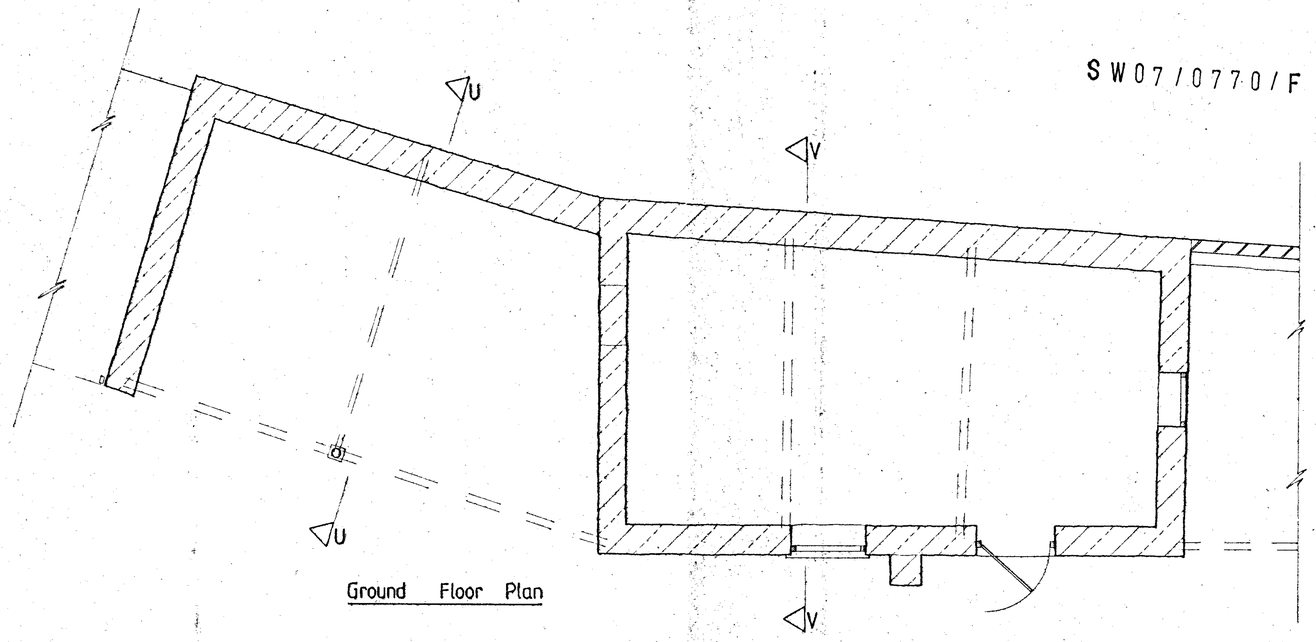

Ground Floor Plan

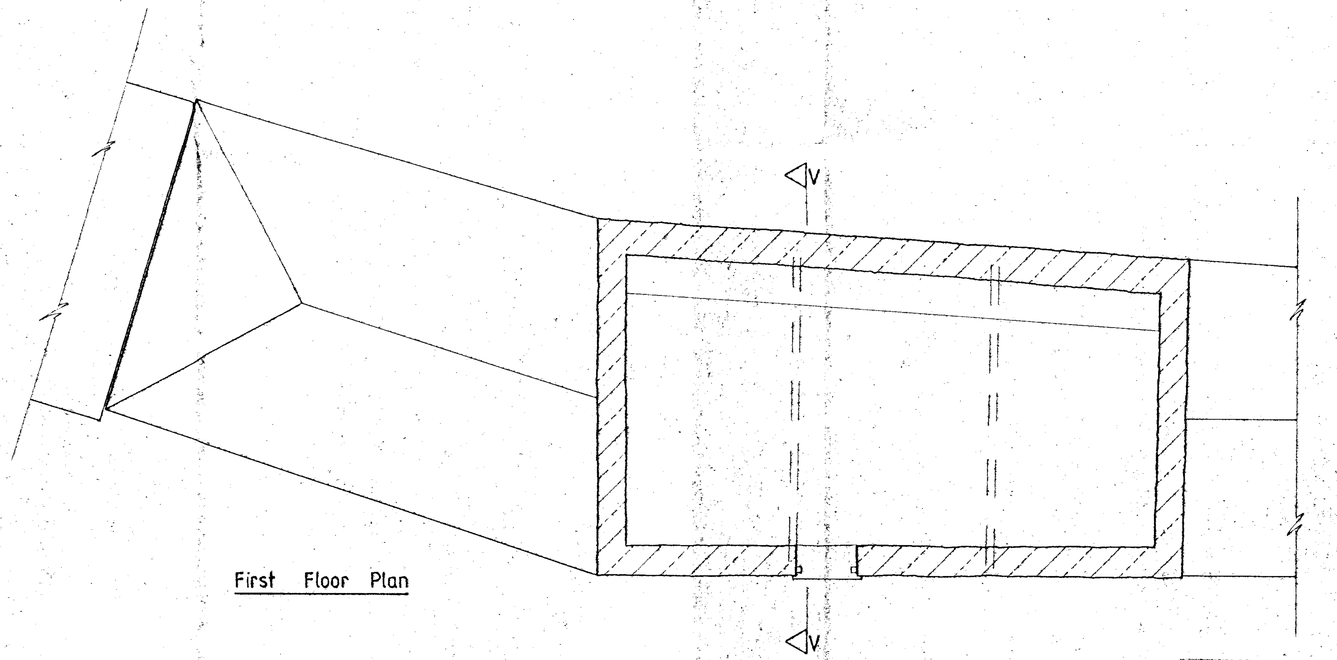

First Floor Plan

13 MAR 2007

Survey of Traditional Farm Buildings

at Sydcombe Farm, Dorstone

Burton & Co. Lydiatt Place Brimfield Ludlow Shropshire SY8 4NP Tel: 01584 711106

Scale 1 : 50

Drawing No: 819/05/E